Installation Instructions

Evolution® Double Sided Movable Mid-Section Kit

Intended Use

The Double-Sided Movable Mid-Section kit is intended to be used in the EvolutionÈ Double-Sided Cable Managers only. Ensure that you have the correct Accessory Panel width to match the manager width.

Parts Included:

Accessory Panel, 3 ea.

Installation

Note: Accessory Panels are designed to accommodate Cable Lashing Bar Kits. If you plan on using these accessories it is recommended that you refer to the Cable Lashing Bar Kit installation instruction sheets for recommended spacing.

1. The Accessory Panel has two sliding locks located on the bottom edge. Slide the locks inward to the unlocked position, see Figure 1.

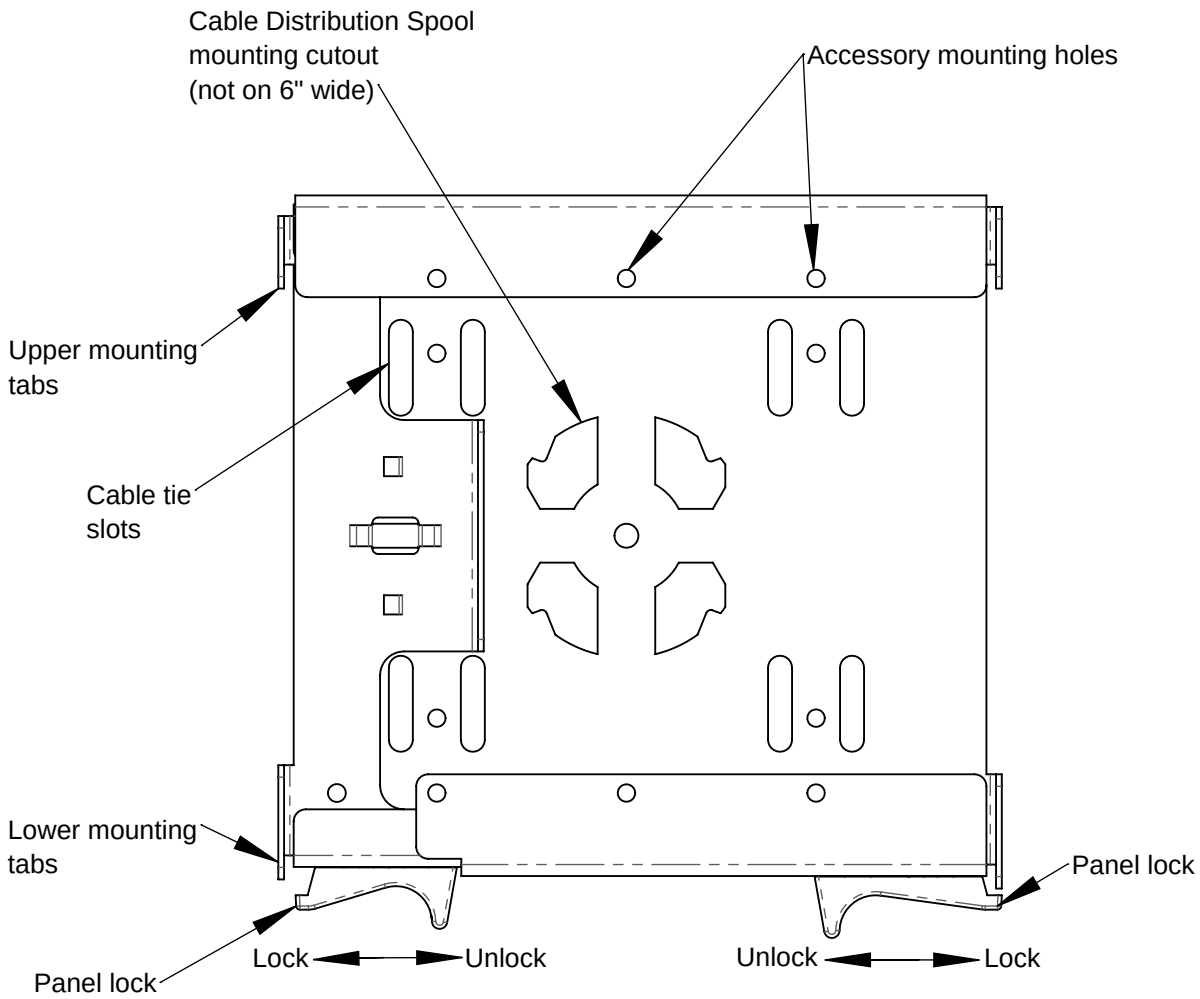

Figure 1

This drawing contains proprietary and confidential information and is protected by U.S. and international law. Unauthorized reproduction, disclosure or use of the drawing or the information therein is expressly forbidden except as agreed to in writing by Chatsworth Products, Inc.

Evolution® Double-Sided Movable Mid-Section Kit

Installation

2. The Double-Sided Movable Mid-Section kit can be mounted anywhere in the cable manager that has a top and bottom pair of mounting lances. The Panel may be mounted in a front, middle, or rear mounting setback position to allow for a custom division of cable management space.

3. Position the Panel above the mounting lances and extend the inside sliding bracket outward until the mounting tabs contact the manager side panels.

4. Slide the Panel down with the mounting tabs being inserted into the mounting lances.

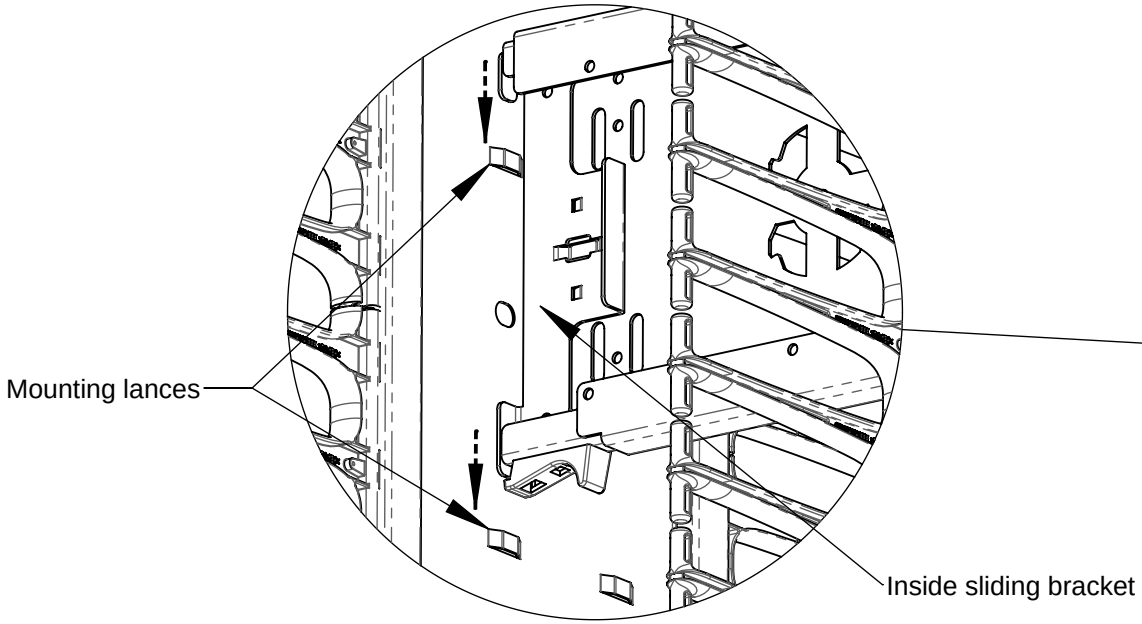

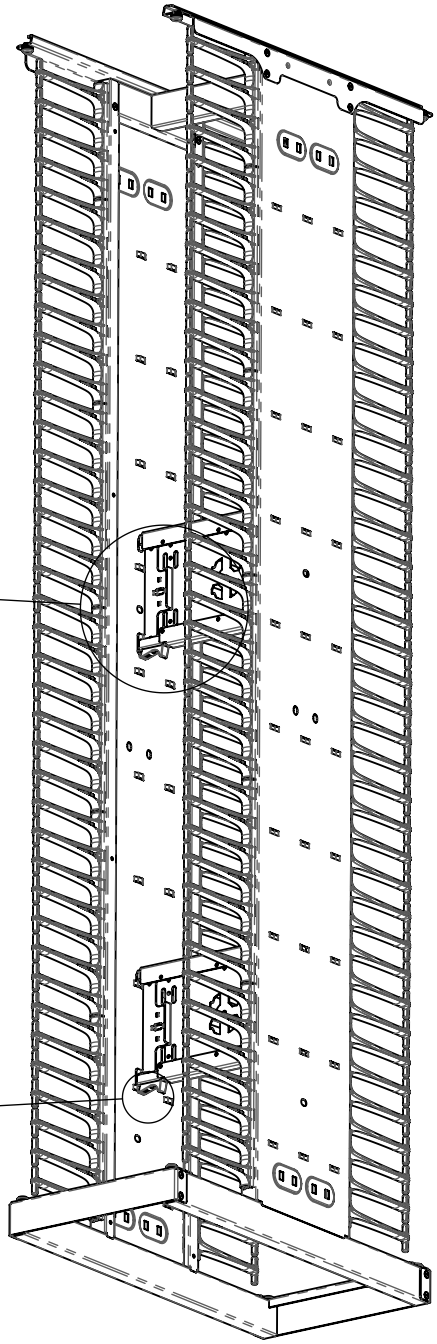
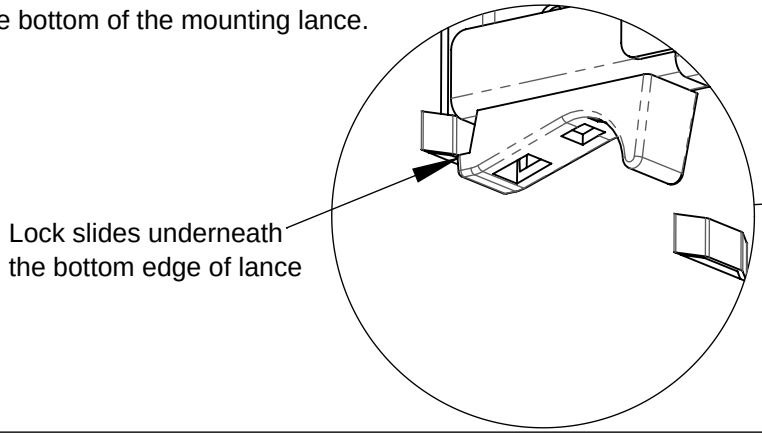
5. Slide the two panel locks outward to the locked position; the end of the lock should be positioned underneath the bottom of the mounting lance.