Installation Instructions

Evolution® Single Sided Fixed Accessory Panel Kit

Intended Use

The Single Sided Fixed Accessory Panel kit is intended to be used in the EvolutionÈ Single-Sided Cable Manager only. Ensure that you have the correct Accessory Panel width to match the manager width.

Tools Required:

8mm wrench
#2 Phillips Screwdriver

Parts Included:

Accessory Panel, 3 ea.
M5x25 Screw, 12 ea.
M5 Nut, 12 ea.

Installation

1. Locate set of mounting holes on the rear of the cable manager where the Panel will be installed.
2. It is recommended to install the Panel from the rear of manager. Orient Panel as shown.
3. Mount the Panel using 4 ea. M5x25 pan head screws & M5 hex flange nuts.

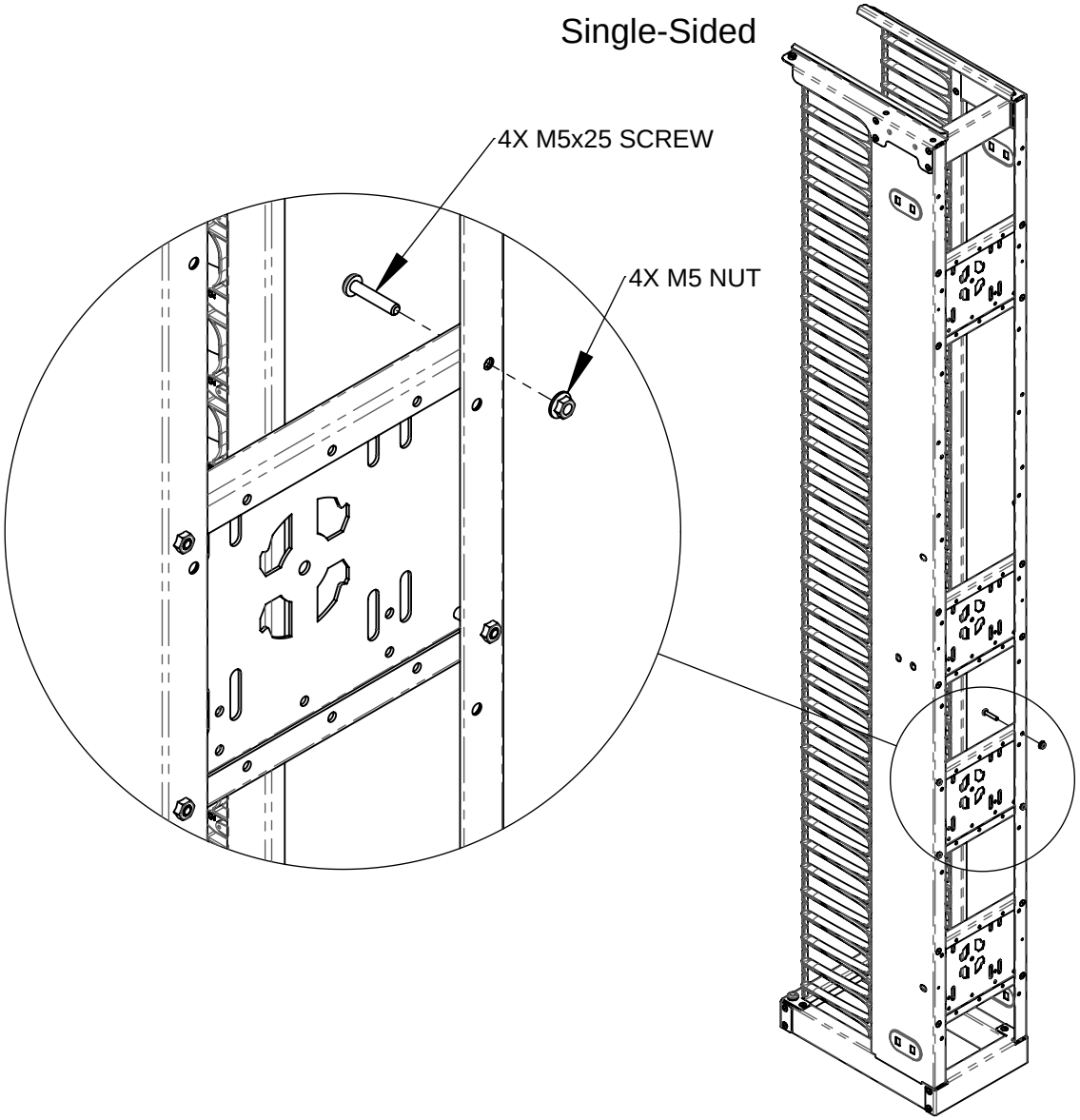

CHATSWORTH PRODUCTS

IIS-733492-001, 6/19/23, Rev. 1, CPI/BDK
800-834-4969 (USA & Canada) Åwww.chatsworth.com Åtechsupport@chatsworth.com
For international phone numbers, see our website or contact CPI Tech Support.

This drawing contains proprietary and confidential information and is protected by U.S. and international law. Unauthorized reproduction, disclosure or use of the drawing or the information therein is expressly forbidden except as agreed to in writing by Chatsworth Products, Inc.